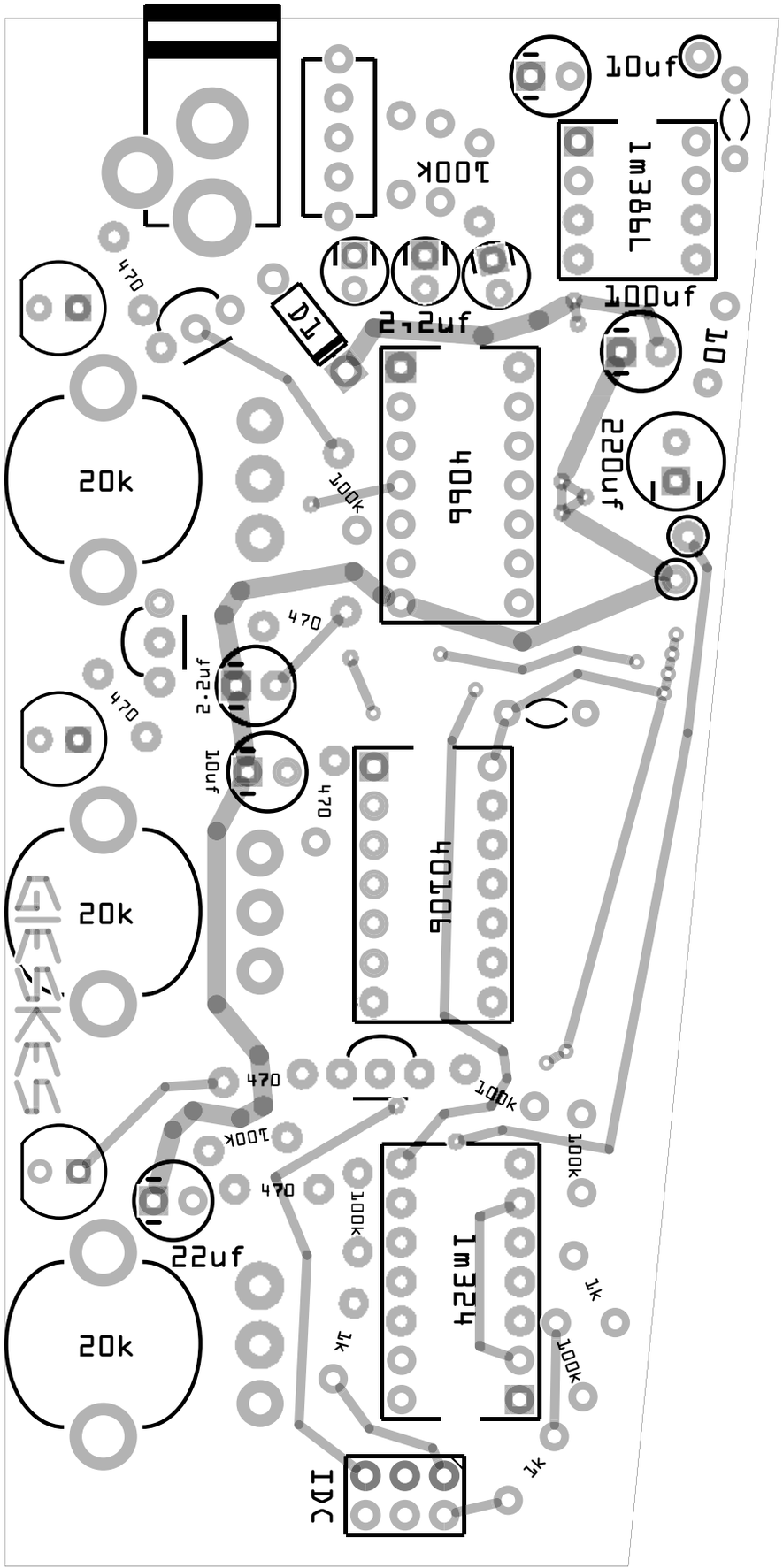
10uf
100k
1m386L
100uf
10
2.2uf
D1
470
20k
4066
100k
220uf
470
2.2uf
470
10uf
470
20k
40106
470
100k
100k
470
100k
22uf
1m324
1k
1k
100k
20k
1k
IDC
GIESKES

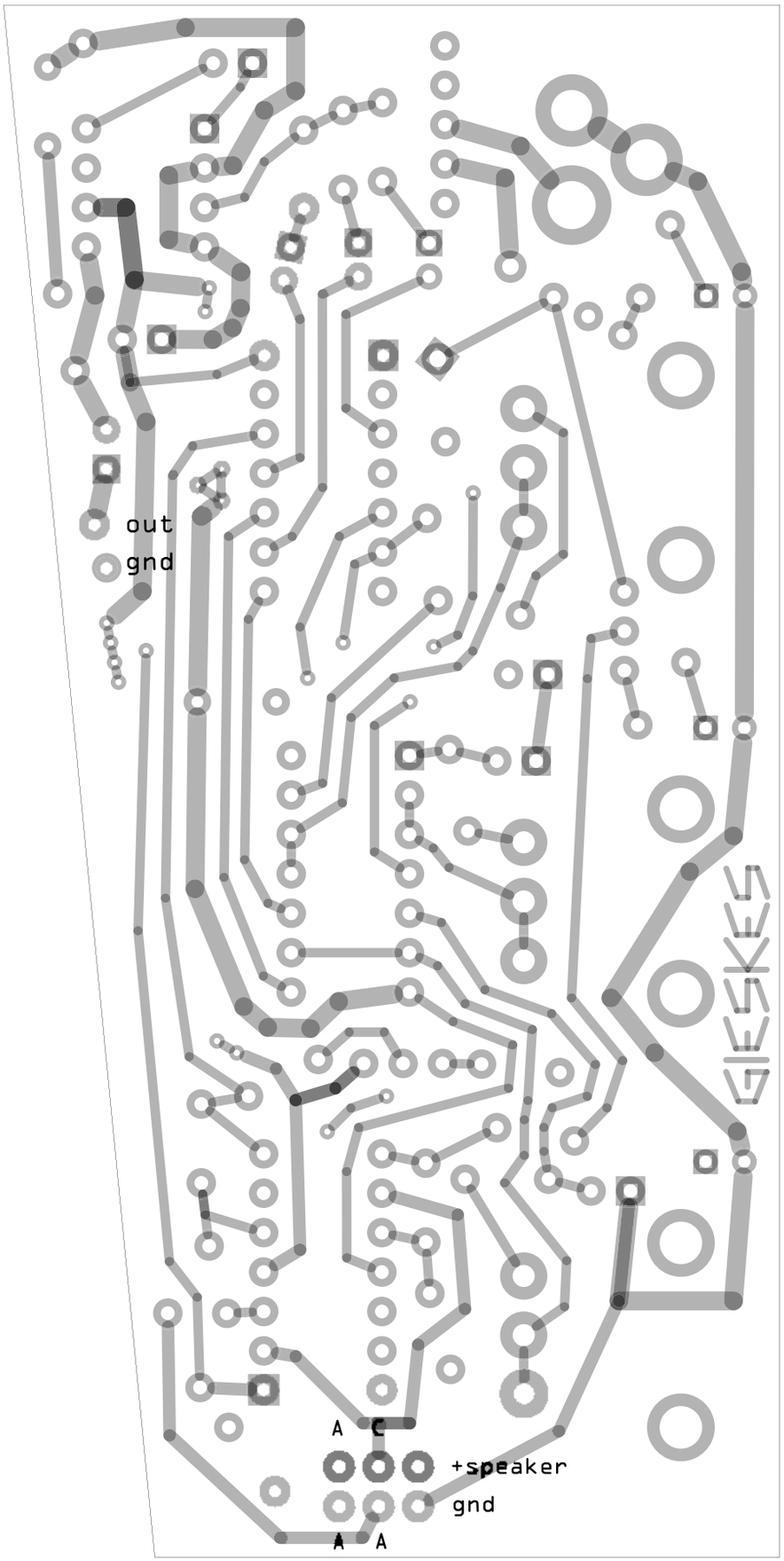
out
gnd
A
C
+speaker
gnd
A
A
GIESKES